image2output Limited: Unit 19, io Centre, Hearle Way, Hatfield Business Park, Hatfield, Herts, AL10 9EW

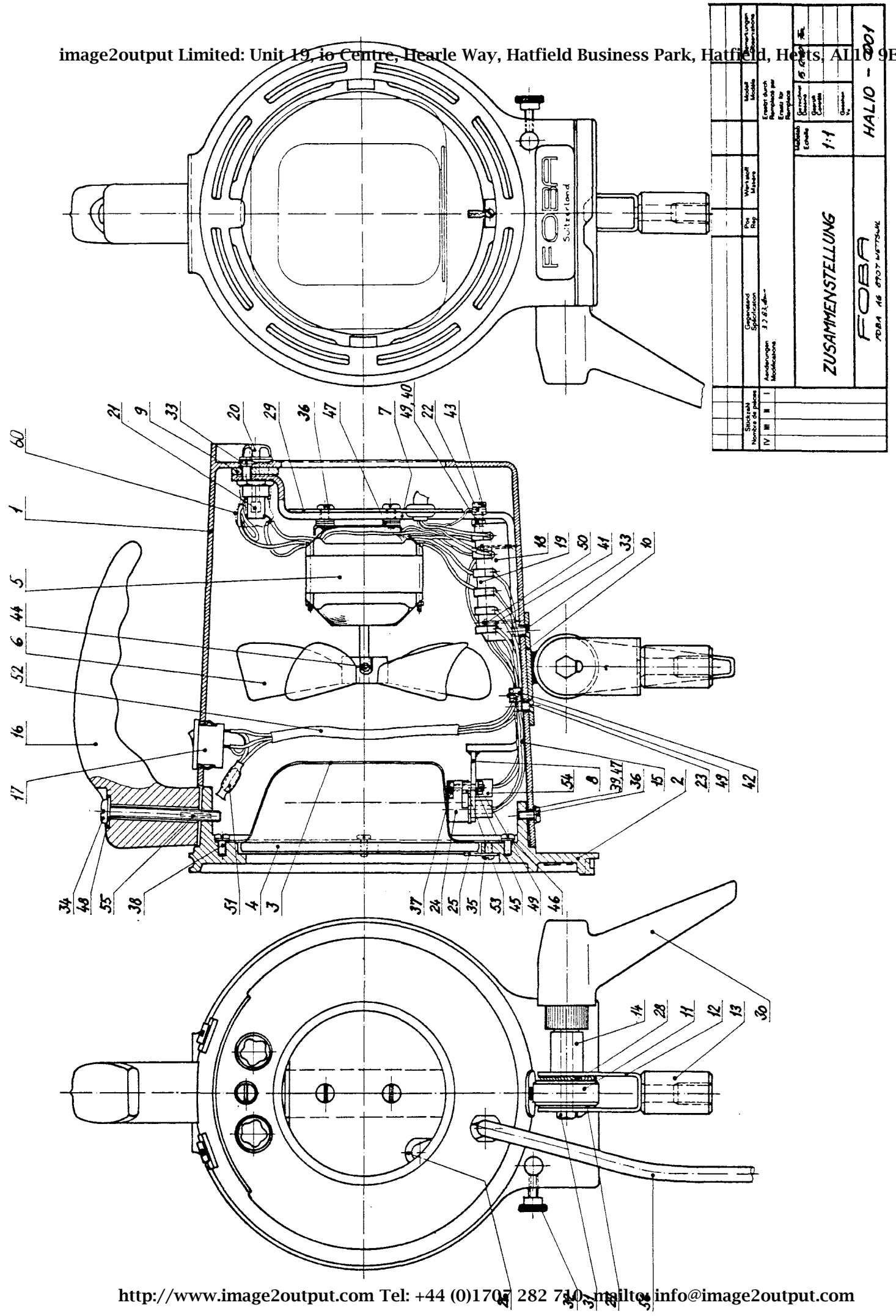

http://www.image2output.com Tel: +44 (0)1707 282 710 mailto:info@image2output.com